VCA ASSOCIATES

7131 Owensmouth B 87, Canoga Park, California 91303 USA

Phone (818) 704-9202 TWX 510 601 5809 VCA ASSOC

IMP™ Instrumentation Microphone Preamplifier

The IMP achieves sonic performance previously found only in vacuum tube and discrete microphone preamplifiers.

The IMP uses VCA ASSOCIATES' MTA 401 supermatched, low noise transistor array and the latest surface mount hybrid technology to allow the OEM to fabricate a truly superb, cost-effective transformerless microphone preamplifier in a minimum of space, with a minimum of external parts.

The IMP is packaged as a 25 pin single inline package (SIP) measuring only 2.6" L x 0.75" H x 0.4" W.

FEATURES:

* Ultra-low THD and IMD (<0.002%) with no overshoot or ringing.
* Near theoretical noise performance: (e_{IN} = -131 dBm).
* Wide bandwidth: D.C. to 400 kHz.
* Flat phase response over entire audio band.
* Internally regulated and zener protected input stage.
* Common mode servo improves CMRR and stablizes common mode D.C. operating point.
* Long term D.C. stability: May be direct coupled. Easily servoed.

IMP Physical Dimensions

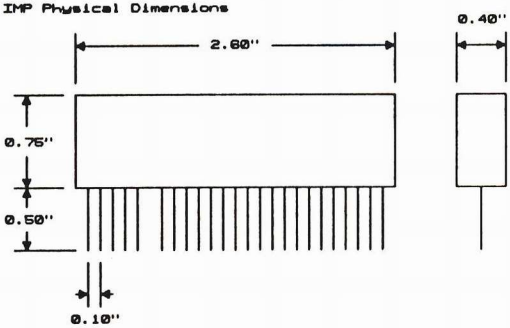

IMP SPECIFICATIONS

PARAMETER	Min	Typ	Max	Units
Positive Supply:				
voltage	15		18	Volts
current		24		mA
Negative Supply:				
voltage	15		18	Volts
current		24		mA
Input Impedance:		88.5		kOhms
-3 dB bandwidth (Av < 60 dB):	400			kHz
Maximum Output Level (± 15 Volt supplies, Z load > 10 kOhms):			+26	dBu
Maximum Input Level:				
Av = 4 dB			+22	dBu
Av = 34 dB			- 8	dBu
Av = 60 dB			-33	dBu
Equivalent Input Noise (Z source = 150 Ohms, 20 kHz BW):				
Av= 4 dB		-105		dBu
Av = 34 dB		-131		dBu
Av = 60 dB		-131.5		dBu
Slew Rate (Measured between pins 18 and 19)		26		V/uSec
Overshoot:			1	%

Common Mode Input Range: +15 dBu (12.33 Volts pk - pk)

Common Mode Rejection Ratio		60 Hz	1 kHz	20 kHz	100 kHz	
Av = 4 dB		56	56	56	55	dB
Av = 34 dB	(typical)	84	84	84	76	dB
Av = 60 dB		87	108	109	101	dB

Vin = +10 dBu, CMRR = 10 + Av(dB) - Vout(dB)

Total Harmonic Distortion (+20 dBu out):		20 Hz	20 kHz	
Av = 4 dB		0.0015	0.0026	%
Av = 34 dB	(typical)	0.0015	0.0039	%
Av = 60 dB		0.0033	0.017	%

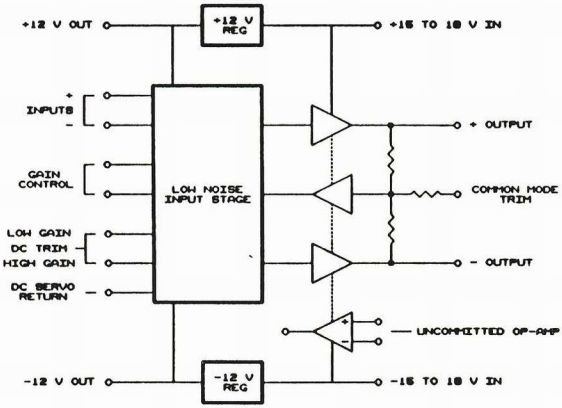

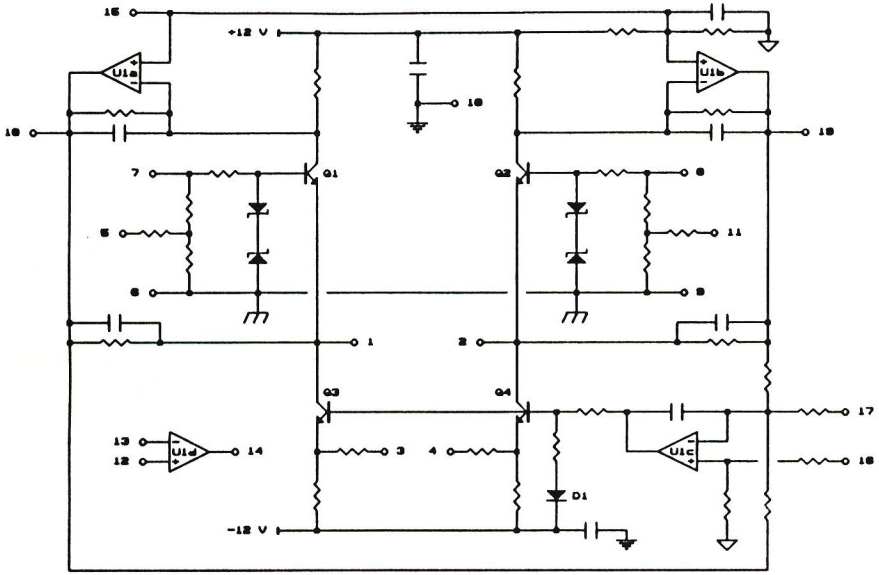

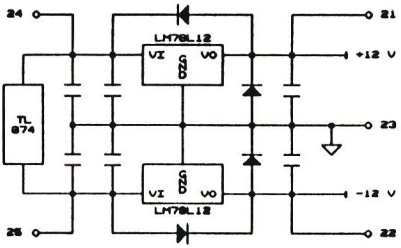

= Input Shield

= Signal Ground Bus

= Power Decoupling Bus

Q1 - Q4, D1 = MTA 481

U1a - U1d = TL 074

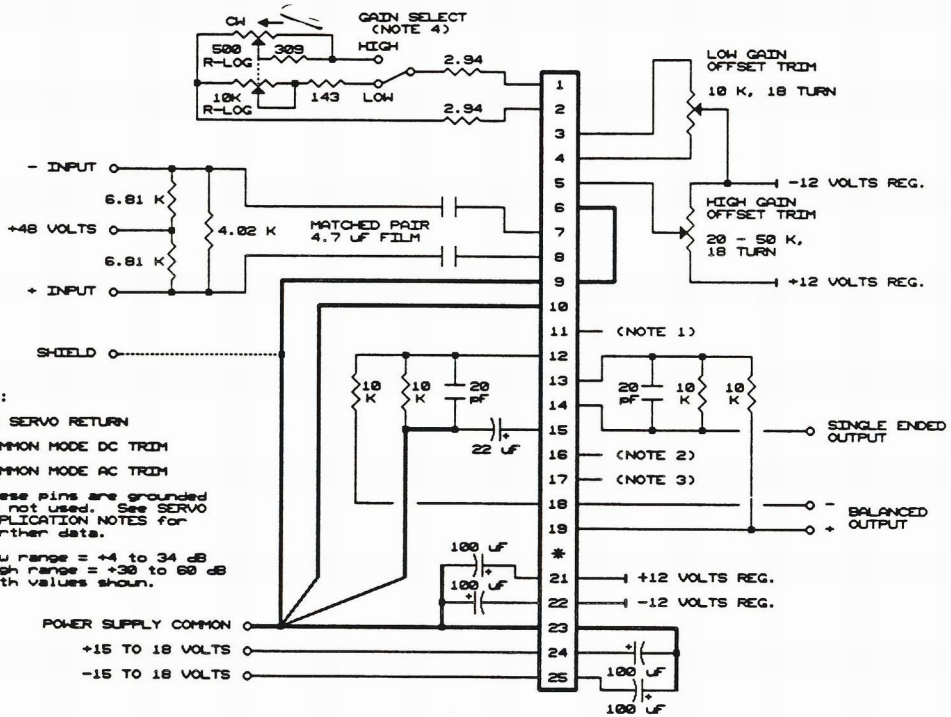

NOTES:

1. DC SERVO RETURN
2. COMMON MODE DC TRIM
3. COMMON MODE AC TRIM

   These pins are grounded if not used. See SERVO APPLICATION NOTES for further data.

4. Low range = +4 to 34 dB
   High range = +30 to 60 dB
   with values shown.

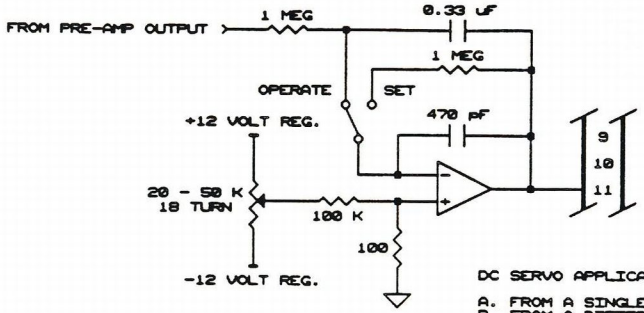

DC SERVO APPLICATIONS:

A. FROM A SINGLE-ENDED OUTPUT
B. FROM A DIFFERENTIAL OUTPUT

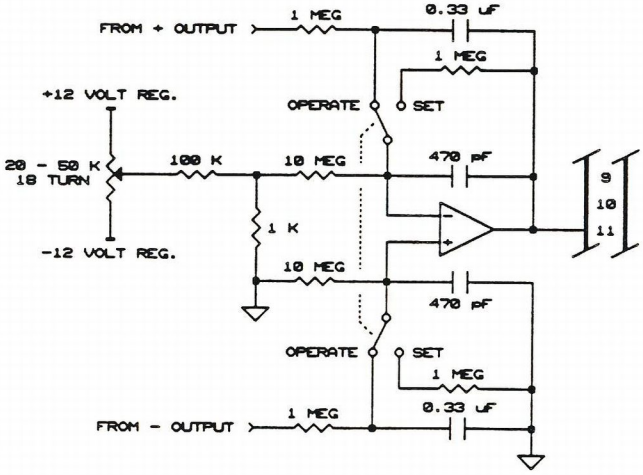

APPLYING COMMON MODE SERVO TRIMS