Assembly Instructions for the KA Electronics RIAA EQ Monitor Switcher

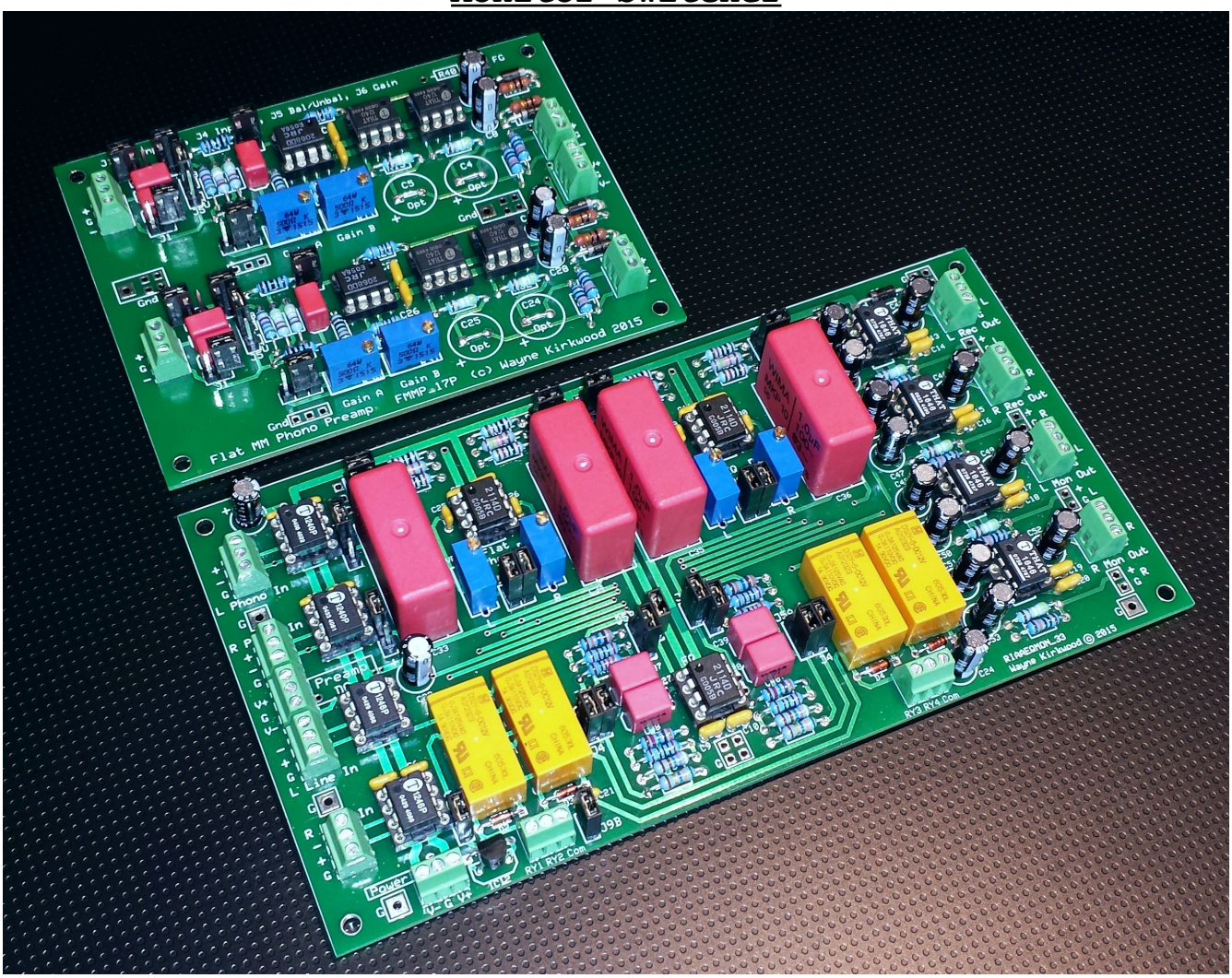

Install IC sockets

Place the PC Board on the bench silkscreen side face up.

Drop eleven 8 pin IC sockets into their respective locations. Observe orientation of the notch. Make sure that you do not place the sockets in the bypass capacitor holes.

Lift the board up and place a piece of cardboard on top of the board to form a sandwich of PC board, sockets and cardboard.

The cardboard is used to hold the sockets in place so the board can be turned over without the sockets dropping out.

Flip the board over.

Tack Solder only two of the corner IC pins. Put downward pressure on the PC board to make certain the sockets are seated on the board as you solder.

Once all the IC sockets are tack soldered, flip the board over.

Make certain that each socket is correctly oriented, fully seated on the board and square.

If you're satisfied with the sockets solder all of the remaining pins.

Visually check each pin's connection particularly those to the ground plane. Reheat any pins if needed.

Install resistors and diodes

Install four 10K 1% resistors at R1, R5, R30, and R34.

Install four 14K3 1% resistors at R2, R6, R31 and R35.

Install four 20K 1% resistors at R3, R7, R32 and R36.

Install two 316K 1% resistors at R10 and R20.

Install two 2K 1% resistors at R11 and R21.

Install two 332R 1% resistors at R12, R22.

Install two 31K6 1% resistors at R13 and R23.

Install two 200R 1% resistors at R14 and R24.

Install two 9K76 1% resistors at R15 and R25.

Install two 53R6 1% resistors at R16 and R26.

Install four 49R9 1% resistors at R40, R42, R44 and R46.

Install four 100K 1% resistors at R41, R43, R45, R47.

Install six 1N4148 diodes at D1 through D6. Observe polarity.

Install two 1N4004 diodes at D7 and D8. Observe polarity.

Install ceramic capacitors

Install twenty one 100 nF (0.1uF) at C1 through C21.

Install four 10 pF at C25, C26, C29 and C30.

If the Inverse RIAA section is to be used exclusively, install two 100 pF capacitors at C27 and C28. For normal playback RIAA de-emphasis or switchable RIAA then do not install C27 and C28.

Install film capacitors

Install four 10 nF 1% (0.01uF) film capacitors at C37, C38, C39 and C40.

The capacitor leads are not always exactly on the center line of the package and may not appear to fit the PC board. If necessary, rotate one or both capacitors 180 degrees in each pair so that they nest together and fit flush with the PC board.

Do not install C33, C34, C35 or C36 at this time.

Install jumper headers

Install the jumper shunts onto the header pins. (They serve as insulators which allows you to position them while soldering without burning your fingers.)

Note that the left and right channels use the same jumper designations.

When installing the headers, tack solder only one pin and reheat it to adjust the position of the header so that its square and flush with the board. Once you're satisfied with the orientation of the headers solder the remaining pins.

Install six 2 pin headers with shunts at J4, J6, J9A and J9B. There are six headers in this step because there are two channels with the designation J4 and J6.

Install six 3 pin headers at J1, J5A and J5B There are six 3 pin headers in total. J1 requires shunts installed on the top two pins. J5A and J5B requires shunts installed on the bottom two pins.

Install two 4 pin headers at J3 and J8. Install four shunts and orient the links vertically. Make certain that the headers are inside the silkscreen and not inserted into the ground pin holes.

Install four 6 pin headers at J2 and J7. J2 and J7 need shunts installed only on the middle row of pins. Make certain that the headers are inside the silkscreen and not inserted into the ground pin holes.

Install electrolytic capacitors

Note: The + (positive) terminals for the electrolytic capacitors have a square pad.

Install two 47uF 35V polarized electrolytic capacitors at C22 and C23. The polarity of these capacitors are critical.

Install a single 10uF 25V polarized electrolytic capacitor at C24. The polarity of this cap is critical.

Install twelve 10uF 35V bipolar capacitors in locations C42 through C53. The polarity of bipolar capacitors is not critical but for consistent visual appearance insert the long lead into the square pad.

Install Phoenix three pin connectors at 12 locations

When installing the Phoenix connectors make sure the openings for the wires point outward to the edge of the board. When installing the connectors, tack solder only one pin and reheat it to adjust the position of the connector so that its square and flush with the board. Once you're satisfied with the orientation of the connector, solder the remaining pins.

Install IC12

Install a 78L12 12V regulator at IC12. Observe orientation. Gently fan the leads and mount the component so that it is the same approximate height as the Phoenix connectors.

Install Trim Pots

The 50K trim pots can be adjusted before installing them to speed PC board testing. Connect an Ohmmeter to the middle pin and the pin located under the adjustment screw.

Adjust two of the trim pots to approximately 14.3K. Adjust the remaining two to 18.5K.

Install two 50K trim pots adjusted to 14.3K at VR1 and VR2. The screw adjustment should be on the top. Use the three middle holes. (The outer two are for the option of installing a fixed resistor.)

Install two additional 50K trim pots adjusted to 18.5K at VR3 and VR4. The screw adjustment should be on the top.

(If fixed resistors are desired instead of trims VR1 through VR4 they can also be installed at R4, R8, R33 and R37.)

Install Relays

Install four 12V DPDT relays at RY1 through RY4.

Install Large Film Capacitors

Install four 1uF 63V Polypropylene capacitors at C33 through C36.

Note: Do not install the ICs at this time.

Check all solder connections and reheat or re-flow them if necessary.

Initial Tests

DC Tests

Connect a source of bipolar DC power.

Ground is in the middle of the connector.

If a variable power supply is used slowly raise the voltage to about +/-15V.

There should be no measurable current draw. If excess current is drawn check the board for solder bridges and correct polarity of D7, D8, C22, C23, C24.

Check the voltages at pin 7 of IC1 through IC4. It should be +15V. The voltages at pin 4 should be -15V.

Check the voltage at pin 8 of IC5, IC6 and IC7. It should be +15V. The voltages at pin 4 should be -15V.

Check the voltages at pin 6 at IC8, IC9, IC10 and IC11. It should be +15V. The voltages at pin 5 should be -15V.

Check the DC voltages at the RY1 through RY4 Phoenix connections. It should be approximately 12V.

Remove power.

Install the ICS

Install two THAT1240 ICs at IC1 and IC2.

Install two THAT1246 ICs at IC3 and IC4.

Install three NJM2114 at IC5, IC6 and IC7.

Install four THAT1646 ICs at IC8 through IC11.

Offset and Current Draw Tests

Reconnect power.

If a variable power supply is used slowly raise the voltage to about +/-15V.

Measure the DC offset of the IC pins listed below. No input or output should be pinned to a supply rail.

The DC offset at pin 6 of IC1 through IC4 should be less than 10 mV.

The DC offset at pins 1 and pins 7 of IC5 and IC7 should be less than 10 mV.

The DC offset of pins 1 and pins 7 of IC6 varies depending on the op amp used. An NJM2114 is typically less than 100 mV.

The DC offset at pins 1 and pins 8 of IC8 through IC11 should be less than 10 mV.

The supply current is typically 80 mA. With 4 relays engaged the positive supply current is typically 150 mA.

This completes assembly and DC tests.

Signal Tests

The RIAA EQ Monitor Switcher has numerous routing and jumper options. A flow diagram and schematic are provided at the end of this document.

The first group of tests are made with the relays un-powered with signal passing through the default paths. This checks active circuitry.

The second group of tests verify proper relay switching.

When the RIAA-EQ Monitor Switcher's relays are in the un-powered “normally-closed” state, the Phono Inputs route to both the record output which is “flat” (unequalized) and the RIAA equalizer input.

The RIAA EQ output also feeds an adjustable gain “post-EQ” buffer and is followed by the Monitor Output.

When relays in the un-powered default configuration the **Record** Output is **flat**. The **Monitor** Output has **RIAA**-EQ'd de-emphasis. This configuration has about 90% of the active circuitry in the signal paths.

A signal generator (or DAC output) and level meter (or A/D inputs) are required. The instrument connections may be balanced, un-balanced or a combination of both.

Jumper Positions for Test

The jumpers should have been installed in the proper location during assembly. Please confirm in the following steps they are in the correct position.

Note that there are two jumpers, left and right, bearing the same designation e.g. J1 Left and J1 Right.

J1 should be in the top-most position. (Input line receiver bypass.)

J2 should be in the middle horizontal position. (0 dB flat gain.)

J3 should be linked. Note: If the jumpers have openings on the side which expose metal, make certain that the exposed sides are pointing outward. Otherwise Left and Right may short together. (Post-gain insert.)

J4 should be linked. Note: If the jumpers have openings on the side which expose metal, make certain that the exposed sides are pointing outward otherwise they may short to J5A. (Pre-EQ insert.)

J5 There are four J5 jumpers: Left J5A and J5B and Right J5A and J5B. J5A and J5B should be installed vertically on the bottom pair of pins. (RIAA-EQ or Inverse-RIAA EQ for test and cutting.)

J6 should be linked. (Post RIAA-EQ insert.)

J7 should be linked horizontally in the middle position. (0 dB post-EQ gain.)

J8 should be linked. Note: If the jumpers have openings on the side which expose metal, make certain that the exposed sides are pointing outward. Otherwise Left and Right may short together.(Post-EQ, post-gain insert.)

J9A and **J9B** should be linked. (+12V relay supply power and ground connections.)

Test the Active Circuitry

The level adjustments performed here set the board for unity gain and only serve as a starting point for final gain adjustments when installed.

Numerous factors such as cartridge sensitivity, preamp headroom, A/D converter overload (if recording flat) and system operating level all enter into the final adjustment.

When making level measurements on THAT1646 outputs use a high impedance or "bridging" (approx. 10KΩ or greater) loading. A THAT1646 loaded in 600Ω will read approximately -0.7 dB less. If a 600Ω load is anticipated in final use, use a termination and set levels to the values shown.

Apply power.

Feed a 0 dBu (775 mV) 1 kHz tone into the Left and Right **Phono Inputs**. The generator can be either balanced or unbalanced. If unbalanced, ground both the G and "-" inputs.

Measure the output level at the Left and Right **Record Outputs**. If a single-ended unbalanced instrument is used, ground the "-" output.

Note: The values of VR1-VR4 should have been preset during assembly so that they are close to the correct values. The adjustments in the following steps should be very minor.

Adjust **VR1** (Left) and **VR2** (Right) for +6 dBu. (If a THAT 1246 is used for some reason instead of a THAT1240 line receiver at IC1 and IC2 then adjust for 0 dBu.)

Switch the placement of jumper(s) **J2** to the +3 dB (top) and -3 dB (bottom) positions and confirm that the gain decreases and increases by the proper amount. Reset J2 to the middle row.

Measure the output level at the Left and Right **Monitor Out**. If a single-ended unbalanced instrument is used, ground the "-" output.

Adjust **VR3** (Left) and **VR4** (Right) for +6 dBu. (If a THAT 1246 is used for some reason instead of a THAT1240 line receiver at IC1 and IC2 then adjust for 0 dBu.) Note: Since this output is RIAA-equalized, the level measurements should only be performed at exactly 1 kHz.

Note: The RIAA EQ filter has an approximate -2.25 dB insertion loss at 1 kHz. The values of VR3 and VR4, and the gain of op amps IC7A and IC7B are slightly greater than the gain of IC5.

Switch the placement of jumper(s) **J7** to the +3 dB (top) and -3 dB (bottom) positions and confirm that the gain decreases and increases by the proper amount. Reset J7 to the middle row.

In the next step we will perform a quick test of the RIAA filter.

Confirm that the **Monitor Output** is reading +6 dBu at 1 kHz.

Increase the generator frequency to **20 kHz**. The output level should drop by approximately -19.5 dB to -13.5 dBu.

Re-check the 1 kHz level to make certain it is +6 dBu.

Decrease the generator frequency to **200 Hz**. The output level should increase by about +8.3 dB to +14.3 dBu.

At this point about 90% of the active circuitry has been tested.

In the next steps the relays will be actuated in order to test the Line input (IC3 and IC4) and relay-switched routing.

Powering the Relays

Make certain J9A and J9B are linked in order to power them from the RIAA-EQ's +15V audio supply.

The relays are activated by grounding them. The Phoenix connectors have a relay common connection on the right-hand side. To power a relay for testing, use a small length of wire to jumper the RY1-RY4 connections to ground.

Testing the Line Input and Signal Routing

Move the generator connections to the Left and Right **Line Inputs**.

Feed a 0 dBu (775mV) **1 kHz** tone in the Left and Right **Line Inputs**. The

generator can be either balanced or unbalanced. If unbalanced ground both the G and "-" inputs.

Measure the output level at the Left and Right **Monitor Out**. If a single-ended unbalanced instrument is used, ground the "-" output.

Initially **there should be no measurable signal** because the **Phono** input is selected and not being fed signal.

Activate relay RY2 by grounding the corresponding Phoenix connector terminal. You should hear the relay mechanically click.

The Left and Right **Monitor Output** level should read 0 dBu.

Methodology: In the next steps a 2 kHz generator frequency is used to verify the application of RIAA EQ. An RIAA-EQ'd signal at 2 kHz will be lower than the flat, un-EQ'd, signal. By reading level we can easily see that the signal path routing has changed. A 1 kHz signal shouldn't be used because the levels will be nearly identical.

Increase the generator frequency to **2 kHz**. The **Monitor Output** level should drop by about -2.5 dB as a result of the Monitor Output being subject to RIAA EQ.

Keep RY2 on. Activate RY4.

The Left and Right **Monitor Output** level should **increase** from -2.5 dBu to 0 dBu showing that the Monitor output is now pre-EQ.

Turn off RY2. Keep RY4 on.

There should be no measurable signal because the **Phono** input is selected.

Activate RY1. RY4 should remain on.

The Left and Right **Monitor Output** level should read 0 dBu showing it is being fed from the Line input and not subject to RIAA EQ.

Turn off RY1 and RY4.

Keep feeding **2 kHz** tone to the Left and Right **Line Inputs**.

Measure the output level at the Left and Right **Record Out**.

Initially **there should be no measurable signal** because the **Phono** input is selected and not being fed signal.

Activate RY2 and RY3.

The Left and Right **Record Outputs** should measure -2.5 dBu showing that they are being fed from the Line Input and subject to RIAA EQ.

Decrease the generator frequency to **1 kHz**. The Left and Right **Record Outputs** should measure 0 dBu to re-confirm that they are subject to equalization.

This completes the audio path checkout for RIAA-EQ'd playback. If the user desires, distortion, noise and RIAA EQ accuracy can be measured using manual measurements or a number of software tools.

Optional Inverse-RIAA Pre-Emphasis

If the RIAA-EQ Monitor Switcher is going to be used to provide Inverse-RIAA pre-emphasis then the following modification and tests should be run.

Install 100 pF capacitors at locations C27 and C28.*

**If the board is going to be switched between RIAA and Inverse-RIAA, use a couple of socket pins harvested from a machined-pin IC socket so that C27 and C28 can be plugged in when needed for Inverse-RIAA. Otherwise install them permanently.*

The 100 pF capacitors prevent the Inverse RIAA curve from extending into daylight to reduce ultrasonic out-of-band response similar to the "Neumann pole." If C27 and C28 are installed for RIAA operation there is a slight 0.8 dB roll-off at 20 kHz.

Move four jumper links, J5A and J5B on the left and right channels to the top position. This switches the feedback components for IC6 from RIAA to Inverse-RIAA.

When using the Inverse-RIAA feature please be aware that the boost at 20 kHz is almost +20 dB. To prevent overload and provide needed headroom, reduce the 1 kHz reference and input level to the Inverse-RIAA stage to -10 dBu.

In final use the best way to provide the attenuation needed is to use the Phono input as the Inverse-RIAA input and attenuate the signal with variable gain stage IC5. VR1 and VR2 are then available to adjust modulation levels at the input of the Inverse-RIAA stage.

To adjust Inverse-RIAA output level use VR3 and VR4.

Note: The Inverse-RIAA EQ filter has an approximate 2.25 dB gain at 1 kHz. The values of VR3 and VR4, and the gain of op amps IC7A and IC7B require re-adjustment when the RIAA-EQ is switched between RIAA and Inverse-RIAA.

Both the Record and Monitor outputs can be used to provide the pre-emphasized output. The Monitor output can be switched to the Line input which can be used for feedback signal monitoring.

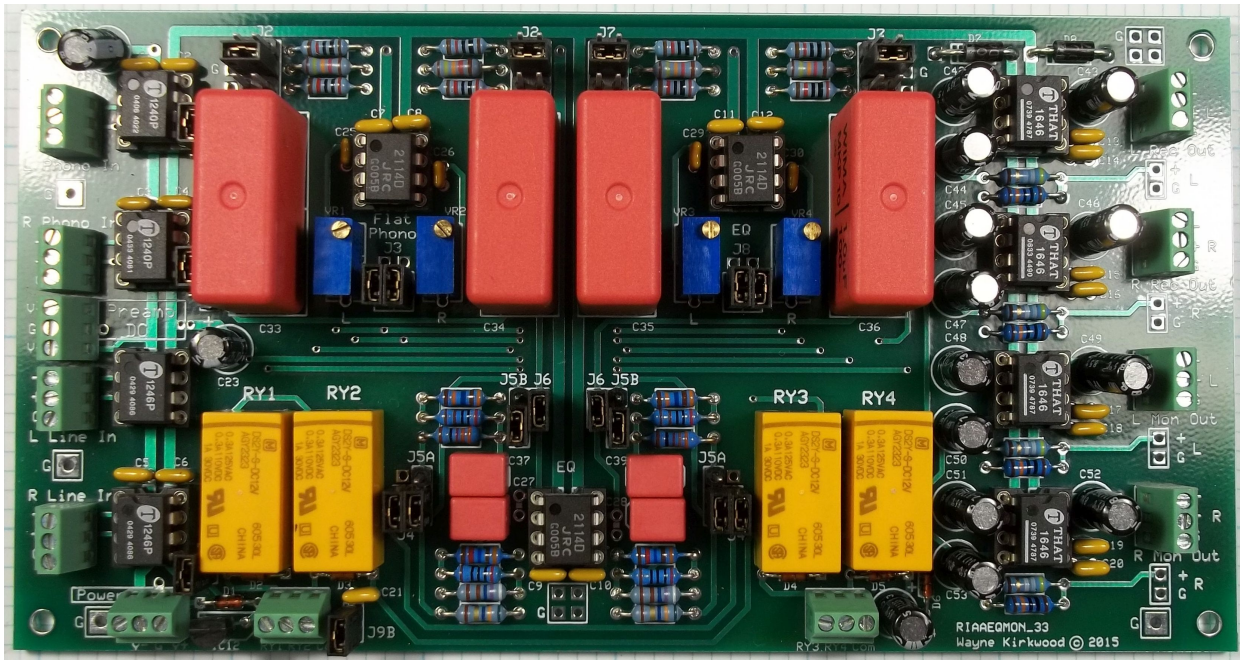

RIAA EQ Monitor Switcher with jumpers installed in the default test positions.

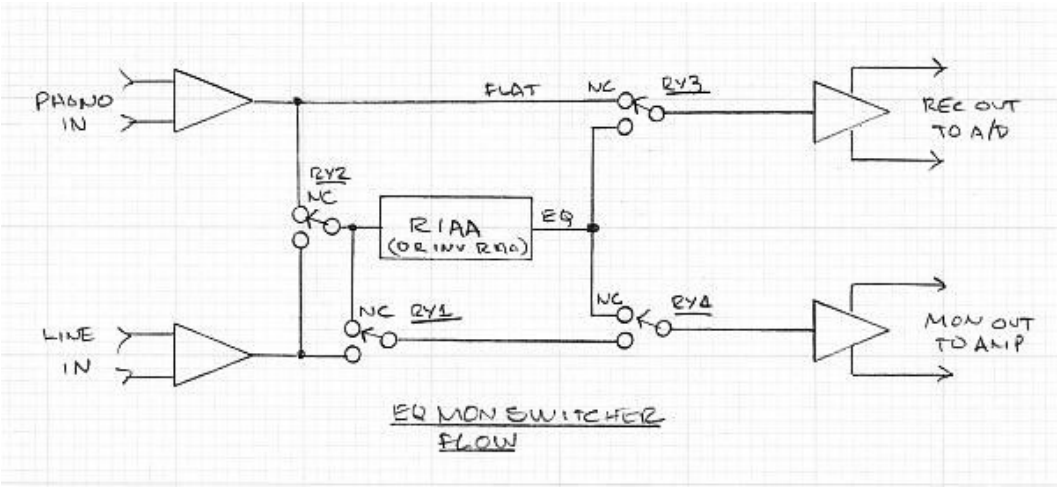

RIAA EQ Monitor Switcher Signal Flow
RIAA EQ/Monitor Switcher Schematic

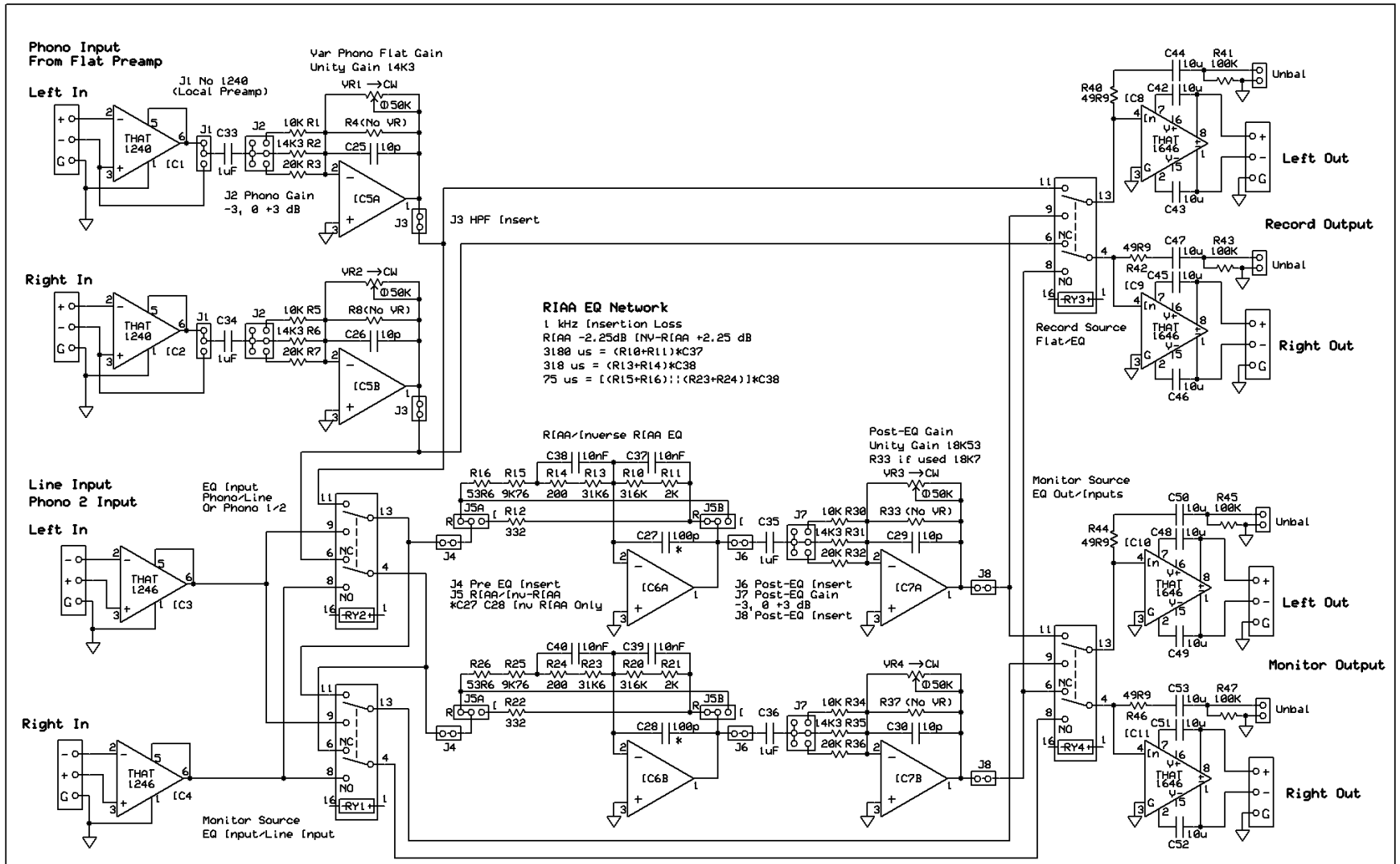

Rockmore-Labs

RIAA EQ Monitor Switcher

Wayne Kirkwood
© 2019

Rev 1 EQMONSW_33
2/18/2019

Sheet 1 of 2

Power Distribution and Relay Control

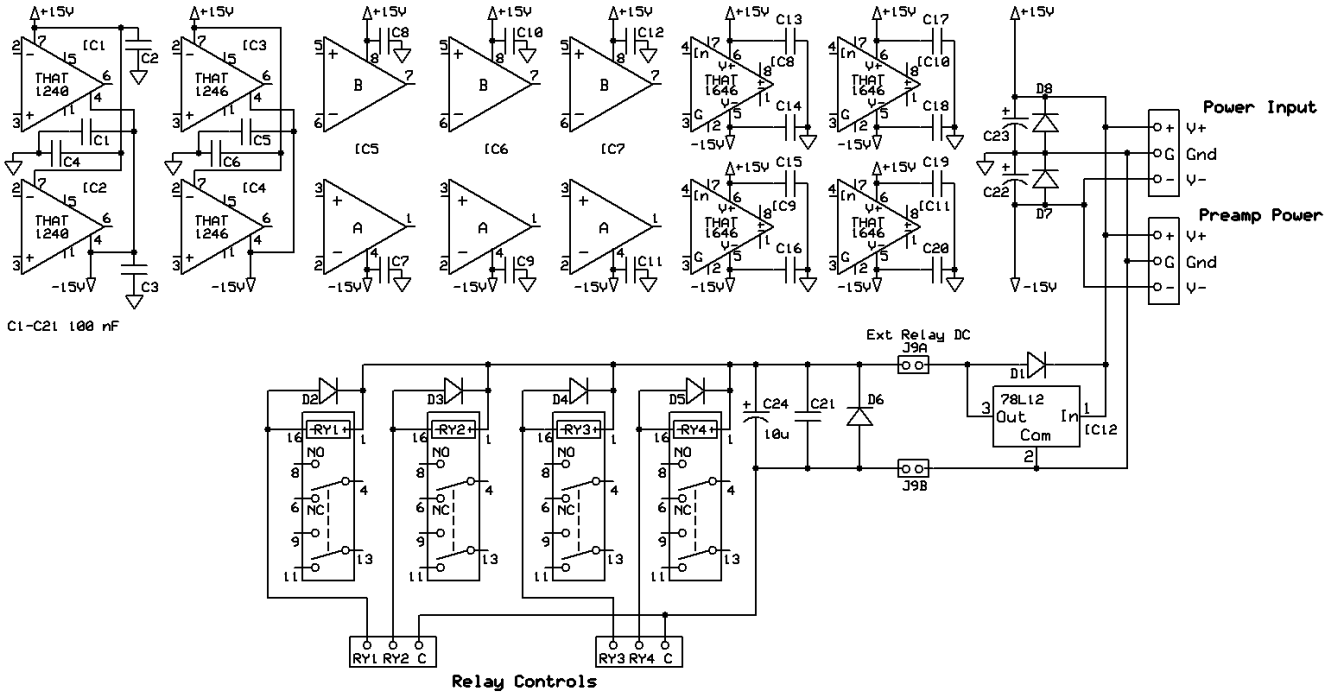

C1-C21 100 nF

Rockmore-Labs		
RIAA EQ Monitor Switcher		
Wayne Kirkwood © 2019	Rev 1 EQMONSW_33 2/18/2019	Sheet 2 of 2

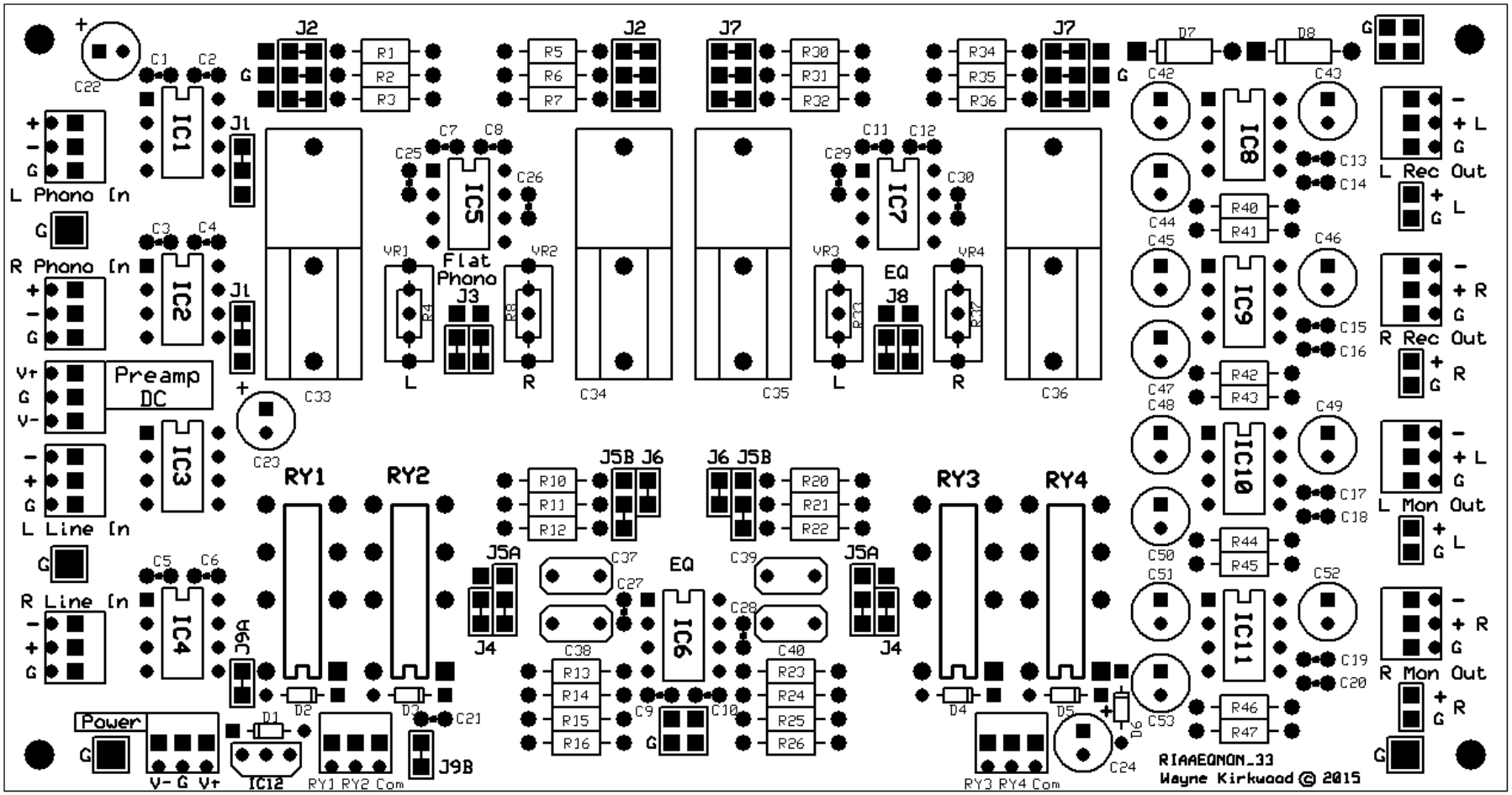
L Phono In
R Phono In
Preamp DC
L Line In
R Line In
Power
V- G V+
IC12
RY1 RY2 Com
RY3 RY4 Com
Flat Phono
EQ
L Rec Out
R Rec Out
L Mon Out
R Mon Out
RIAAEQMON_33
Wayne Kirkwood © 2015

Detailed Parts List

A complete bill of materials is available from Mouser Electronics:

https://www.mouser.com/ProjectManager/ProjectDetail.aspx?AccessID=dbccd32fc

Other Resources

Pro Audio Design Forum Build Thread:

http://www.proaudiodesignforum.com/forum/php/viewtopic.php?f=7&t=753

Lathe Trolls Inverse-RIAA Article:

https://www.lathetrolls.com/viewtopic.php?f=9&t=5848

For more information contact: sales@ka-electronics.com