to whatever frequency is thought desirable. The limit of this approach to noise reduction is set by how much power it is desirable to dissipate in R1.

There is a temptation to fall for the techno-fallacy that if it can be done, it should be done. A greatly extended LF range (say below 0.5 Hz) exposes the amplifier to some interesting new problems of DC drift. A design with its lower point set at 0.1 Hz is likely to have its output wavering up and down by tens on milliVolts, as a result of air currents differentially cooling the input pair, introducing variations that are slow but still too fast for the servo to correct. Whether these perturbations are likely to cause subtle intermodulations in speaker units is a moot point; it is certain that it does not look good on an oscilloscope, and could cause reviewers to raise their eyebrows. Note that unsteady air currents can exist even in a closed box due to convection from internal heating.

A cascode input stage reduces this problem by greatly lowering the voltage drop across the input transistors, and hence their dissipation, package temperature, and vulnerability to air currents. While it has been speculated that an enormously extended LF range benefits reproduction by reducing phase distortion at the bottom of the audio spectrum, there seems to be no hard evidence for this, and in practical terms there is no real incentive to extend the LF bandwidth greatly beyond what is actually necessary.

Non-inverting integrators

The obvious way to build a non-inverting integrator is to use a standard inverting integrator followed by an inverter. The first op-amp must have good DC accuracy as it is here the the amplifier DC level is compared with 0 V. The second op-amp is wholly inside the servo loop so its DC accuracy is not important. This arrangement is shown in Figure 14.3. It is not a popular approach because it is perfectly possible to make a non-inverting integrator with one op-amp. It does however have the advantage of being conceptually simple; it is very easy to calculate. The frequency response of the integrator is needed to calculate the low-frequency response of the whole system.

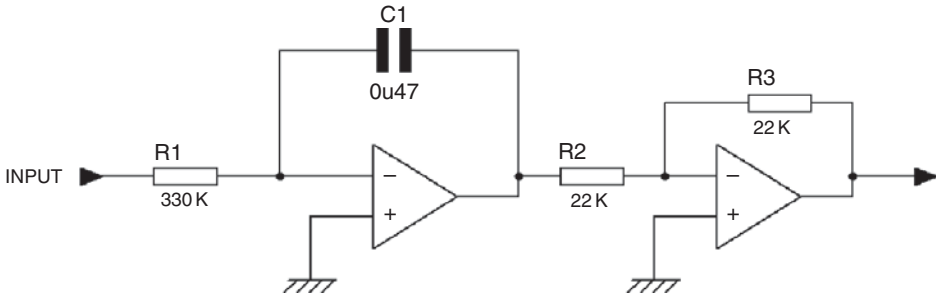

Figure 14.3
A conventional inverting integrator followed by an inverter

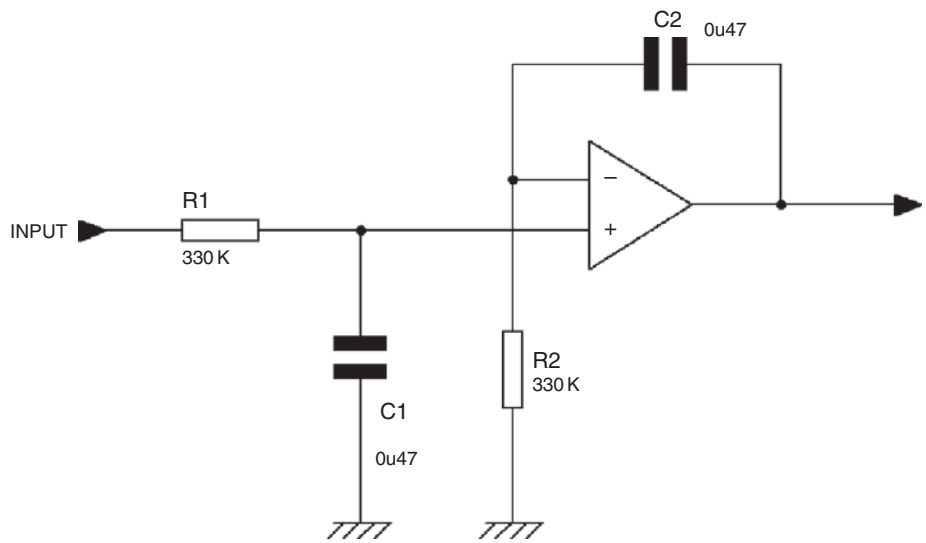

Figure 14.4
A non-inverting integrator that requires only one op-amp

The component values shown in Figure 14.3 give unity gain at 1 Hz.

Figure 14.4 shows a non-inverting integrator that has often been used in DC servo applications, having the great advantage of requiring one op-amp. It does however use two capacitors; if you are aiming for a really low roll these can become quite large for non-electrolytics and will be correspondingly expensive. Despite the presence of two RC time-constants, this circuit is still a simple integrator with a standard −6 dB/octave frequency response.

At the input is a simple RC lag, with the usual exponential time response to step changes; its deviation from being an integrator is compensated for by the RC lead network in the feedback network. A good question is what happens if the two RC time-constants are not identical; does the circuit go haywire? Fortunately not. A mismatch only causes gain errors at very low frequencies, and these are unlikely to be large enough to be a problem. An RC mismatch of ±10% leads to an error of ±0.3 dB at 1.0 Hz, and this error has almost reached its asymptote of ±0.8 dB at 0.1 Hz.

The frequency domain response of Figure 14.4 is:

$$A = \frac{1}{j\omega RC} \qquad \text{Equation 14.1}$$

where $\omega = 2\pi f$ exactly as for the simple integrator of Figure 14.3. The values shown give unity gain at 1 Hz.

Figure 14.5 displays a rather superior non-inverting integrator circuit that requires only one op-amp and one capacitor. How it works is by no means immediately obvious, but work it does. R1 and C1 form a simple lag circuit at the input. By itself, this naturally does not give the desired integrator response of a steadily rising or falling capacitor voltage as a result of a step input; instead it gives the familiar exponential response, because as the

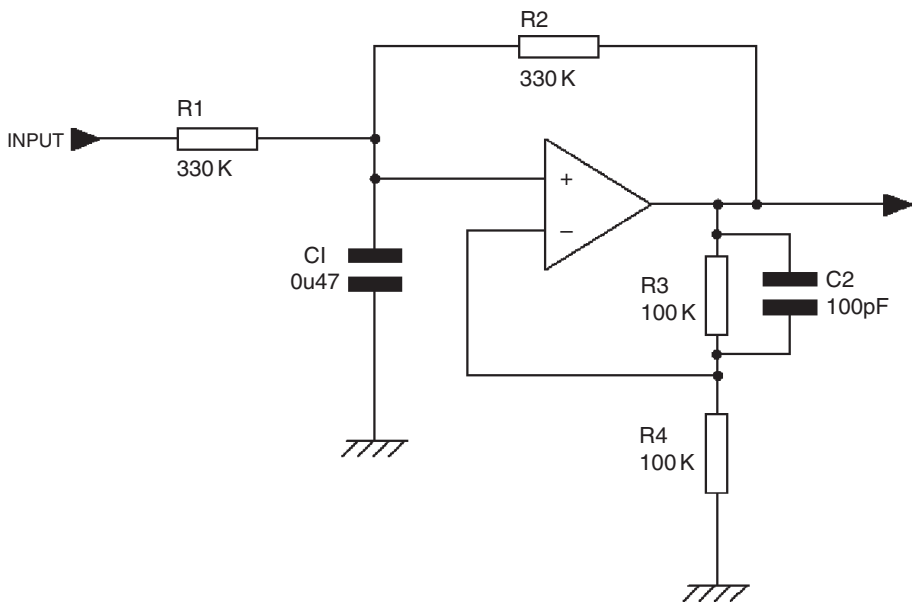

Figure 14.5
A non-inverting integrator that requires only one op-amp and one capacitor

capacitor voltage rises the voltage across R1 falls, and the rate of capacitor charging is reduced. In this circuit however, as the capacitor voltage rises the output of the op-amp rises at twice the rate, due to the gain set up by R3 and R4, and so the increasing current flowing into C1 through R2 exactly compensates for the decreasing current flowing through R1, and the voltage on C1 rises linearly, as though it were being charged from a constant current source. This is in fact the case, because the circuit can be viewed as equivalent to a Howland current source driving into a capacitor.

As for the previous circuit, doubts may be entertained as to what happens when the compensation is less than perfect. For example, here it depends on R1 and R2 being the same value, and also the equality of R3 and R4, to set a gain of exactly two. Normal circuit tolerances do not cause problems with its use as an amplifier servo.

Note that R3 and R4 can be high value resistors. Stray capacitances are dealt with by the addition of C2, which in most cases will be found to be essential for the HF stability of this configuration.

The frequency domain response is now different

$$A = \frac{1}{j\omega \frac{R}{2} C}$$

$$R = R1 = R2$$

Equation 14.2

The R/2 term appears because C1 is now being charged through two equal resistors R1 and R2. The values shown therefore give unity gain at 2 Hz.

Choice of op-amps

All of these integrator circuits use high resistor values to keep the size of the capacitors down. It is essential to use FET-input op-amps, with their near-zero bias and offset currents. Bipolar op-amps have many fine properties, but they are not useful here. You will need a reasonably high quality FET op-amp to beat the non-servo amplifiers whose offset does not exceed ±15 mV offset at the output.

Here are some prime candidates, giving the maximum ± offset voltages, and the relative cost at the time of writing

Op-amp specs compared

Type	Offset at 25°C (mV)	Offset over −40 to +85°C (mV)	Relative cost
TLO51	1.5	2.5	1.00
OPA134	2	3	1.34
AD711JN	2	3	1.48
OPA627AP	0.28	0.5	16.0

Note that the TL051 looks like quite a bargain, and going for a serious improvement on this with the OPA627AP will cost you deep in the purse.

Servo authority

The phrase "servo authority" refers to the amount of control that the DC servo system has over the output DC level of the amplifier. It is, I hope, clear that the correct approach is to design a good input stage that gives a reasonably small DC offset unaided, and then add the servo system to correct the last few dozen millivolts, rather than to throw together something that needs to be hauled into correct operation by brute-force servo action.

In the latter case, the servo must have high authority in order to do its job, and if the servo op-amp dies and its output hits one of its rails, the amplifier will follow suit. The DC offset protection should come into action to prevent disaster, but it is still an unhappy situation.

However, if the input stage is well-designed, so the servo is only called upon to make fine adjustments, it is possible to limit the servo authority, by proportioning the circuit values so that R3 in Figure 14.2 is relatively high. Then, even if the op-amp fails, the amplifier offset will be modest. In many cases it is possible for the amplifier to continue to function without any ill-effects on the loudspeakers. This might be valuable in sound reinforcement applications and the like.

Calculating the effects of op-amp failure in the circuit of Figure 14.2 is straightforward. The system appears as a shunt-feedback amplifier where